Injection Valve EV 6

www.bosch-motorsport.com

BOSCH
Invented for life

- Single beam or twin beam
- Flow rate at 3 bar: up to 962 cm³/min
- Spray angle 15 to 70°

EV 6 injection valves are designed to inject the fuel as efficiently as possible into the intake manifold runner to achieve a homogeneous distribution of fuel in air flow.
EV 6 injection valves feature high corrosion resistance and excellent engine start characteristics. The hydraulic connections of the Bosch injection valves EV 6, EV 12 and EV 14 are compatible.

Application

Fuel Filter Requirements

Particle size	≥ 5 µm
Max. particle size	35 µm
Separation rate	≥ 82 %

Technical Specifications

Mechanical Data

System pressure	Max. 8 bar
Weight	≤ 55 g
Fuel input	Top-feed injector
Operating temperature	-40 to 110°C
Permissible fuel temperatures	≤ 70°C
Climate-proof corresponding to saline fog test DIN 50 021	
Housing design	Standard (S), Long (L)
Spray type	C (Conical Spray) or E (2-Spray)
Flow rate at 3 bar (n-heptane)	134 to 962 cm³/min 92 to 658 g/min
Spray angle α	15 to 70°
Bent angle γ	0 to 20°
Coil resistance	1.2 to 16 Ω
Fuel compatibility	E85 / M100 (after Methanol-operating the valves must be flushed with normal gasoline-fuel)

Electrical Data

Power supply	6 to 16.5 V

Connectors and Wires

Connectors	Jetronic, Sumitomo, Motorsport connectors

Installation Notes

Please ask for more information before ordering.

Injectors with low resistance are only supplied with a peak and hold power stage.

Ordering Information

EV 6 CS, 116 g/min n-heptane
Order number **0 280 156 194**

EV 6 CL, 261 g/min n-heptane
Order number **0 280 155 868**

EV 6 EL, 261 g/min n-heptane
Order number **0 280 155 830**

EV 6 ES, 269 g/min n-heptane
Order number **0 280 156 063**

EV 6 CS, 310 g/min n-heptane
Order number **0 280 156 012**

EV 6 CS, 658 g/min n-heptane
Order number **B 280 434 499-02**

Accessories

Clip for locking bush of plastic
Order number **2 431 314 004**

Clip for locking bush of steel
Order number **2 431 314 011**

Dimensions

C: Conical Spray

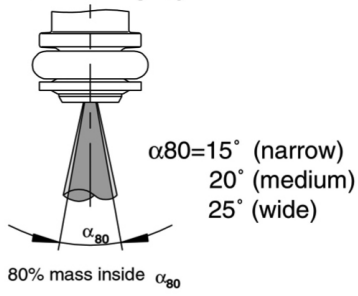

E: 2-Spray

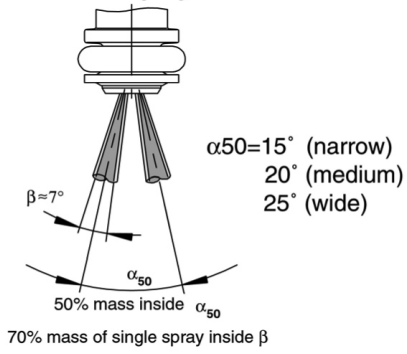

Angle between connection and spray level (δ = delta):
(only 2-spray preparation)

δ = 0°- 360° possible

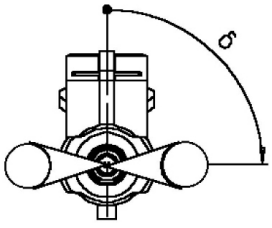

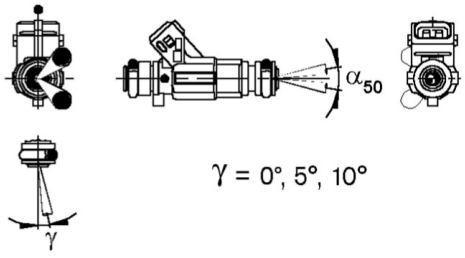

Spray Illustrations

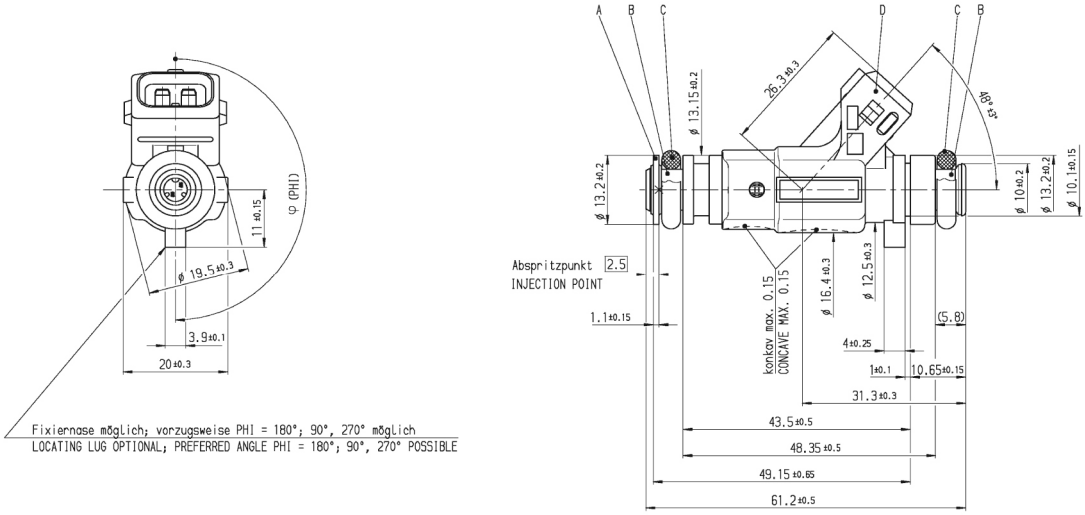

EV6 Standard

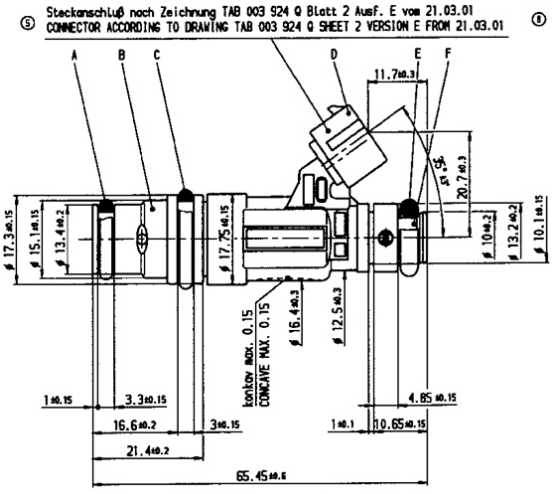

EV6 Long

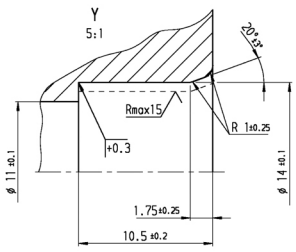

Version mit Stahl-Tasse
VERSION WITH STEEL-CUP

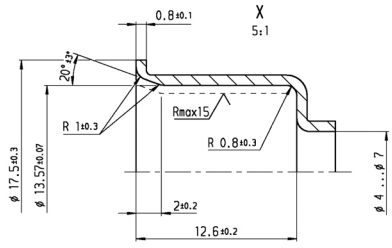

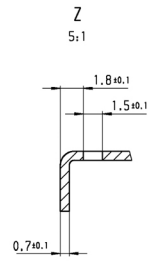

Version mit Kunststoff-Tasse
VERSION WITH PLASTIC-CUP

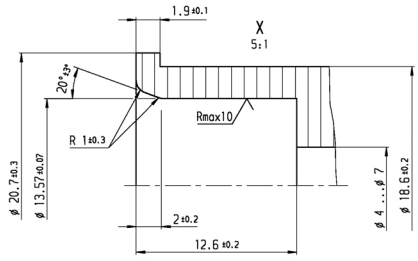

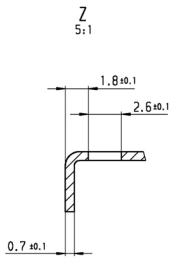

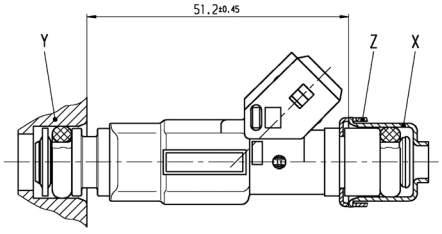

Mounting Instructions

EV 6 Variations

Variations of production type valves

Part Nr.	0 280 156 194	0 280 155 868	0 280 155 830	0 280 156 063	0 280 156 012
Flow rate/min	116 g/170 cm^3	261 g/382 cm^3	261 g/382 cm^3	269 g/393 cm^3	310 g/453 cm^3
Type	C	C	E	E	C
Housing	S	L	L	S	S
α80	15°	15°	20°	15°	20°
γ	0°	0°	0°	10°	5°
δ	-	-	90°	270°	90°
Resistance	14.5 Ω	12 Ω	12 Ω	12 Ω	12 Ω

Further variations are available on request

Variation of Motorsport valves

Part Nr.	B 280 434 499-02
Flow rate/min	658 g/962 cm^3
Type	C
Housing	S
α80	25°
γ	0°
δ	-
Resistance	12 Ω

Further variations are available on request.

Represented by:

Europe:
Bosch Engineering GmbH
Motorsport
Robert-Bosch-Allee 1
74232 Abstatt
Germany
Tel.: +49 7062 911 79101
Fax: +49 7062 911 79104
motorsport@bosch.com
www.bosch-motorsport.de

North and South America:
Bosch Engineering North America
Motorsport
38000 Hills Tech Drive
Farmington Hills, MI 48331-3417
United States of America
Tel.: +1 248 876 2977
Fax: +1 248 876 7373
motorsport@bosch.com
www.bosch-motorsport.com

Asia-Pacific:
Bosch Engineering Japan K.K.
Motorsport
18F Queen's Tower C, 2-3-5 Minato Mirai
Nishi-ku, Yokohama-shi
Kanagawa 220-6218
Japan
Tel.: +81 45 650 5610
Fax: +81 45 650 5611
motorsport@bosch.com

Australia and New Zealand:
Robert Bosch Pty. Ltd
1555 Centre Road
Clayton, Victoria, 3168
Australia
Tel.: +61 (3) 9541 3901
Fax: +61 (3) 9541 7225
motor.sport@au.bosch.com

© Bosch Engineering GmbH 2014 | Data subject to change without notice
2775912459 | en, V1, 19. Aug 2014